Cam switches SKG

Łącznik krzywkowy mocowany do pulpitu w otworze ø22 pokrętny kluczem SK10G SA22

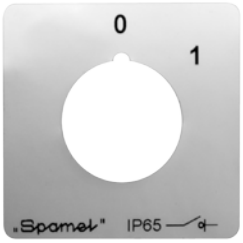

Srebrna naklejka na pulpit

Ordering code

SK 10 G- [ ] \ SA22

Mounting

SA22 napęd D22 (IP54) z kluczykiem wyciąganym w położeniu 0°

Assembly number

1.825	Disconnector 0-1 (1 - pole)
1.828	Disconnector 0-1 (2 - pole)
2.8211	Disconnector 0-1 (3 - pole)
2.8210	Disconnector 0-1 (4 - pole)
3.8220	Disconnector 0-1 (5 - pole)
3.8210	Disconnector 0-1 (6 - pole)
3.8368	Reversing switch L-0-P
3.83139	2-speed switch 2 separate windings
2.4414	Rotary disconnector 0-1
2.8445	Control switch 0-1-2-3
1.834	Disconnector 1-0-2 (1 - pole)
2.8338	Disconnector 1-0-2 (2 - pole)
3.8380	Disconnector 1-0-2 (3 - pole)

Current

10 10 A

Dimensions

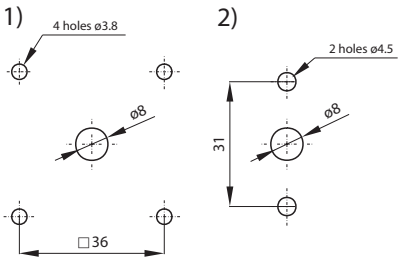

Spacing of fixing holes for the assembly:
1) P03, P04, P07, P08 (4 tapping screws)
2) P23, P24, P27, P28 (2 screws)

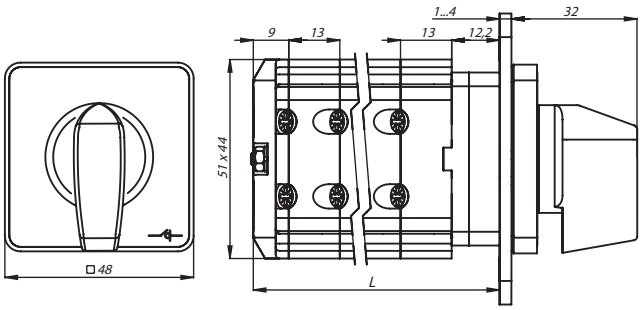

Number of segments	L [mm]
1	34
2	47
3	60
4	73
5	86
6	99
7	112
8	125
9	138
10	151

Number of segments in the switch

1 ... 3

Technical data

Rated insulation voltage U_e	690 V
Rated withstand impulse voltage U_{imp}	6 kV
Rated continuous current $I_u=I_{th}$	16 A
Rated operational current I_e for AC-21A, AC-22A	10 A (230/400/500/690 V)
Rated operational power P_e for AC-23A	2 kW (230 V) 4 kW (400 V) 5 kW (500 V) 6 kW (690 V)
Rated operational power P_e for AC-3	1.5 kW (230 V) 3 kW (400 V) 3.5 kW (500 V) 5 kW (690 V)
Rated operational current I_e for DC-21A	10 A (24 V) 6 A (110 V) 5 A (220 V)
Short-time short-circuit withstand current I_{cw}(1s)	0.5 kA
Rated short-circuit making current I_{cm}	0.7 kA
Rated conventional short-circuit current	10 kA
Rated current fuse link gG	10 A
Wire gauge	1,0...2,5 mm^2 (solid, stranded)
Tightening torque, terminals	max 0,8 Nm
Panel mounting	ø22
Mechanical endurance	3.0 mln (transposition cycles)